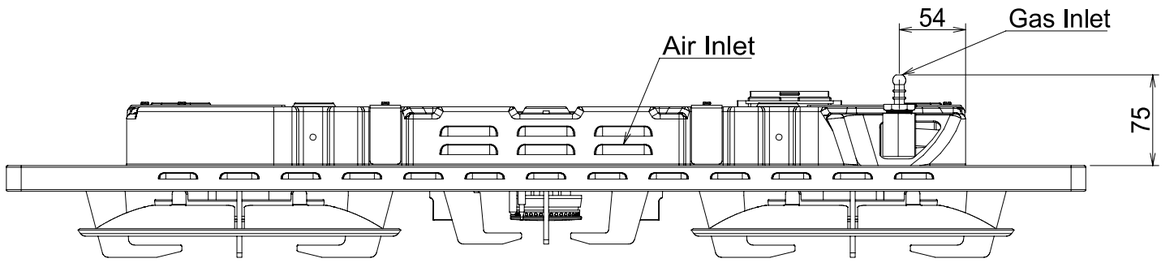

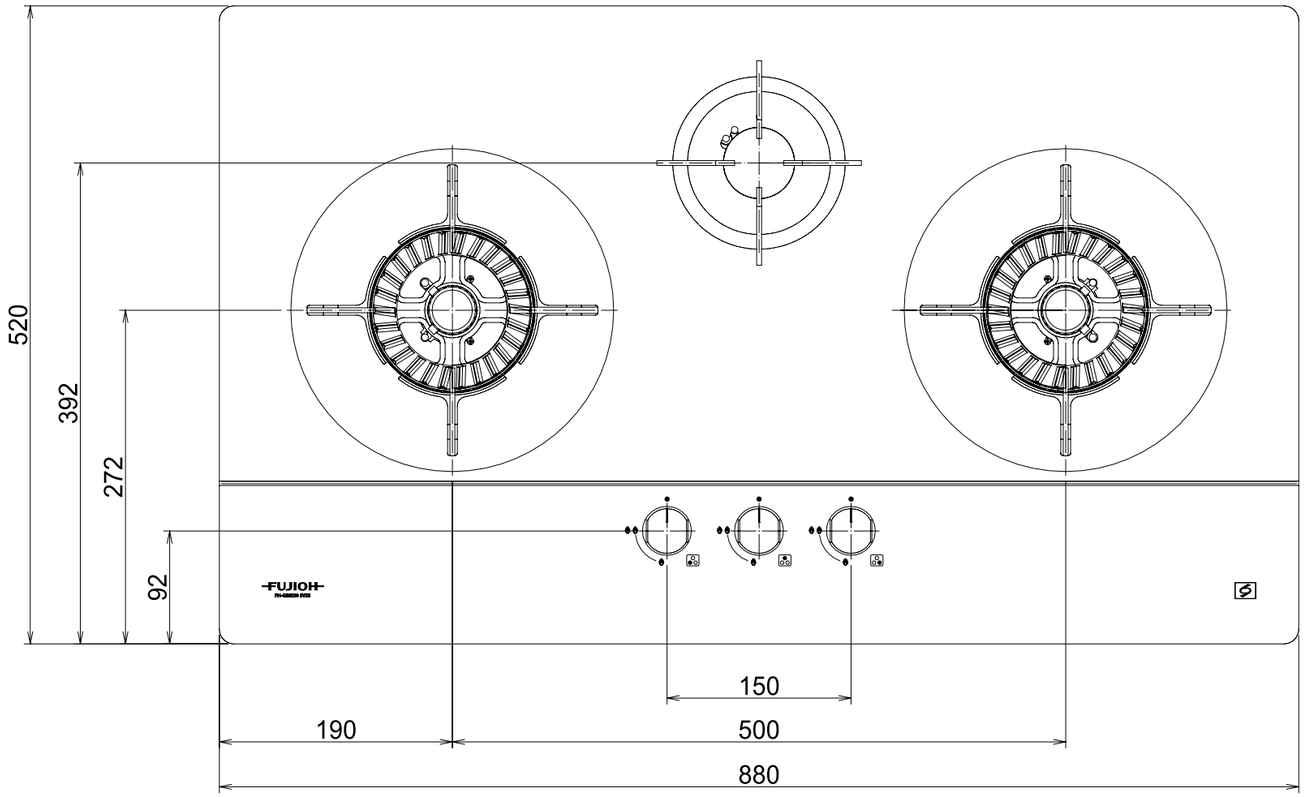

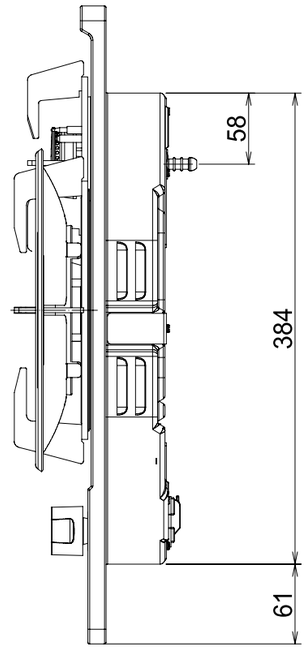

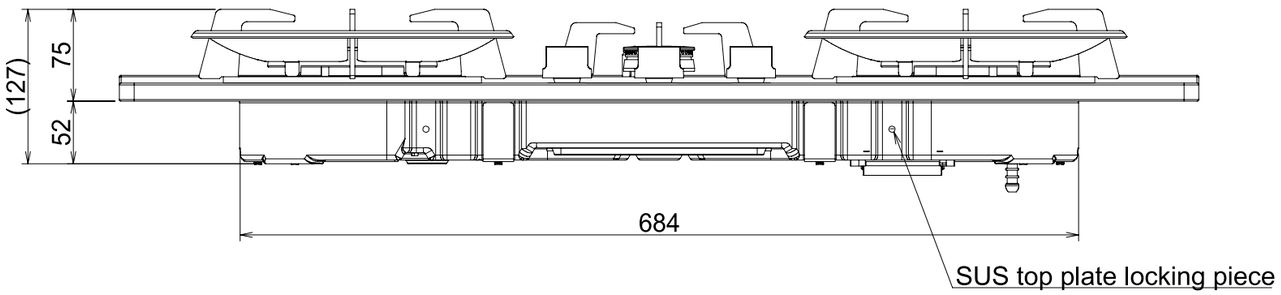

Mark	Revised record	Date
A	Full rewrite.	02/06/2023

FH-GS6530 SVSS	——	——	——
Model	Product code	Color	Note
Created date	12/05/2022	Product category	Built-in Gas Hob
Updated date	02/06/2023	Model	FH-GS6530 SVSS
FUJIOH	Scale 1/5	Product outline drawing	